Cambridge Assessment International Education

Cambridge International AS & A Level

CANDIDATE NAME

CENTRE NUMBER | | | | | |

CANDIDATE NUMBER | | | | |

1745800966

PHYSICS **9702/23**

Paper 2 AS Level Structured Questions **October/November 2023**

1 hour 15 minutes

You must answer on the question paper.

No additional materials are needed.

INSTRUCTIONS

- Answer **all** questions.
- Use a black or dark blue pen. You may use an HB pencil for any diagrams or graphs.
- Write your name, centre number and candidate number in the boxes at the top of the page.
- Write your answer to each question in the space provided.
- Do **not** use an erasable pen or correction fluid.
- Do **not** write on any bar codes.
- You may use a calculator.
- You should show all your working and use appropriate units.

INFORMATION

- The total mark for this paper is 60.
- The number of marks for each question or part question is shown in brackets [ ].

This document has **20** pages. Any blank pages are indicated.

© UCLES 2023

Data

acceleration of free fall	g	=	$9.81\ \text{m s}^{-2}$
speed of light in free space	c	=	$3.00 \times 10^{8}\ \text{m s}^{-1}$
elementary charge	e	=	$1.60 \times 10^{-19}\ \text{C}$
unified atomic mass unit	1 u	=	$1.66 \times 10^{-27}\ \text{kg}$
rest mass of proton	m_p	=	$1.67 \times 10^{-27}\ \text{kg}$
rest mass of electron	m_e	=	$9.11 \times 10^{-31}\ \text{kg}$
Avogadro constant	N_A	=	$6.02 \times 10^{23}\ \text{mol}^{-1}$
molar gas constant	R	=	$8.31\ \text{J K}^{-1}\ \text{mol}^{-1}$
Boltzmann constant	k	=	$1.38 \times 10^{-23}\ \text{J K}^{-1}$
gravitational constant	G	=	$6.67 \times 10^{-11}\ \text{N m}^2\ \text{kg}^{-2}$
permittivity of free space	ε_0	=	$8.85 \times 10^{-12}\ \text{F m}^{-1}$
	$\left(\frac{1}{4\pi\varepsilon_0}\right.$	=	$\left.8.99 \times 10^{9}\ \text{m F}^{-1}\right)$
Planck constant	h	=	$6.63 \times 10^{-34}\ \text{J s}$
Stefan–Boltzmann constant	σ	=	$5.67 \times 10^{-8}\ \text{W m}^{-2}\ \text{K}^{-4}$

Formulae

uniformly accelerated motion	s	=	$ut + \frac{1}{2}at^2$
	v^2	=	$u^2 + 2as$
hydrostatic pressure	Δp	=	$\rho g \Delta h$
upthrust	F	=	$\rho g V$
Doppler effect for sound waves	f_o	=	$\frac{f_\text{s} v}{v \pm v_\text{s}}$
electric current	I	=	$Anvq$
resistors in series	R	=	$R_1 + R_2 + \ldots$
resistors in parallel	$\frac{1}{R}$	=	$\frac{1}{R_1} + \frac{1}{R_2} + \ldots$

© UCLES 2023

BLANK PAGE

1 **(a)** Table 1.1 lists some physical quantities. Complete the table by placing a tick (✓) next to the scalar quantities.

Table 1.1

acceleration	
charge	
momentum	
power	
upthrust	

[1]

(b) A uniform cylinder has diameter D, length L and mass M.
The density ρ of the cylinder is given by

$$\rho = \frac{4M}{\pi D^2 L}.$$

Table 1.2 shows the data obtained from an experiment to determine the density of the cylinder.

Table 1.2

quantity	measurement	percentage uncertainty
D	(26.2 ± 0.1) mm	.....%
L	(162 ± 1) mm	.....%
M	(247 ± 1) g	0.4%

(i) Calculate the percentage uncertainties in D and L. Write your answers in Table 1.2.

[1]

© UCLES 2023

(ii) Calculate the density of the cylinder. Give your answer to three significant figures.

density = ... $kg\,m^{-3}$ [2]

(iii) Calculate the percentage uncertainty in the density.

percentage uncertainty = ...% [2]

[Total: 6]

2 A ball on horizontal ground is kicked towards a vertical wall. Fig. 2.1 shows the path of the ball.

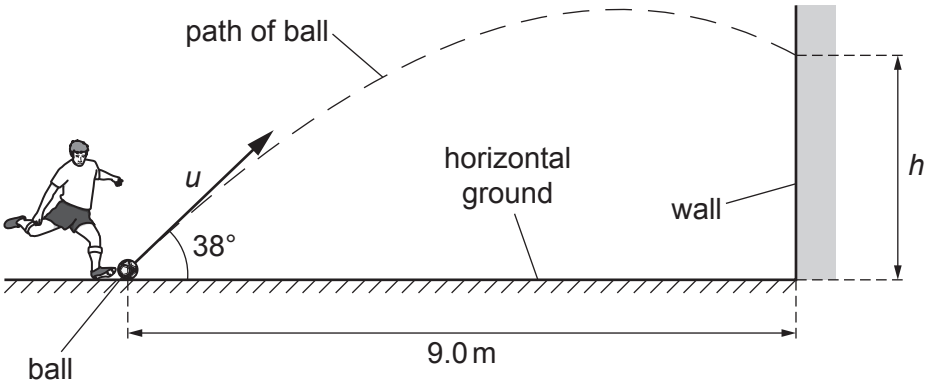

Fig. 2.1 (not to scale)

The ball has an initial velocity u at an angle of 38° to the ground. The ball travels a horizontal distance of 9.0 m before striking the wall at a height h above the ground. The horizontal component u_H of the initial velocity of the ball is 9.5 m s^{-1}.

Air resistance is negligible.

(a) (i) Show that the time t for the ball to reach the wall is 0.95 s.

[1]

(ii) Calculate the vertical component u_V of the initial velocity of the ball.

u_V = ... m s^{-1} [2]

(iii) Determine h.

h = ... m [2]

(b) The speed of the ball just after striking the wall is less than its speed just before striking the wall.

State what this indicates about the nature of the collision of the ball with the wall.

.....

..... [1]

[Total: 6]

3 **(a)** State the conditions for a system to be in equilibrium.

.....

.....

..... [2]

(b) Fig. 3.1 shows an airship in flight. The airship is propelled by identical fans that can be angled to control the motion of the airship.

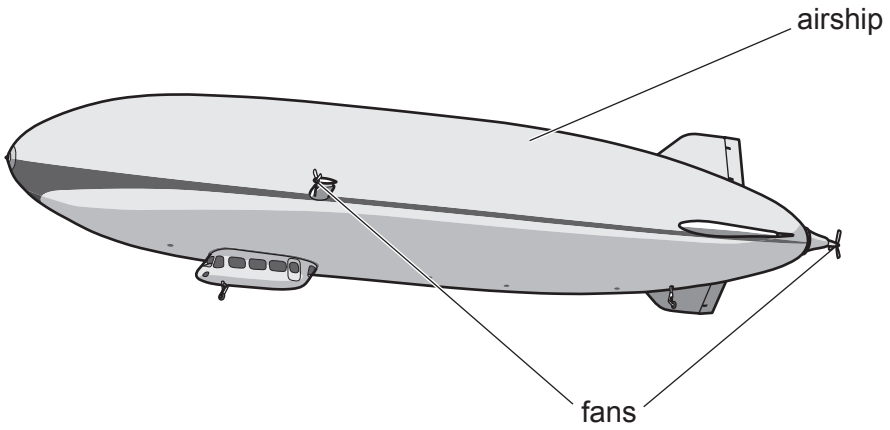

Fig. 3.1

The upthrust on the airship is 93 000 N.
The density of the surrounding air is 1.2 kg m^{-3}.

(i) Calculate the volume of air displaced by the airship.

volume = ... m^3 [1]

(ii) When fully loaded, the weight of the airship is greater than the upthrust.
To maintain horizontal flight, the fans provide a total vertical force of 3.0×10^3 N upwards on the airship.

Calculate the mass of the airship.

mass = ... kg [2]

© UCLES 2023

(c) At a certain time, the airship in **(b)** is stationary. The thrust force exerted by a fan on the airship is 2800 N.

To produce this force, a mass of 64 kg of air is propelled through the blades of the fan in a time of 0.50 s. Assume that this air is initially stationary at the entrance to the fan.

Calculate:

(i) the change in momentum Δp of the air propelled through the fan blades in this time

Δp = ... kg m s^{-1} [2]

(ii) the speed of the air as it leaves the fan

speed = ... m s^{-1} [2]

(iii) the total kinetic energy of this air due to its movement through the fan.

kinetic energy = ... J [2]

[Total: 11]

4 Fig. 4.1 shows the variation with extension x of the tensile force F for two wires, G and H, made from the same material.

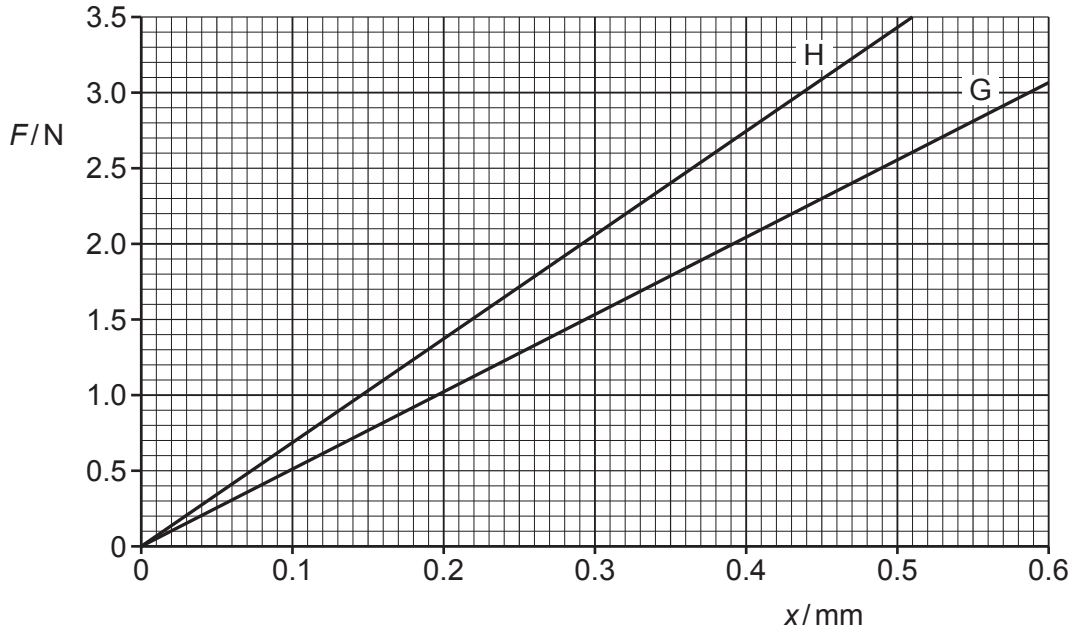

Fig. 4.1

The elastic limit has not been exceeded for G or H.

(a) For the lines in Fig. 4.1:

(i) state what is represented by the gradient

..... [1]

(ii) explain why the area under the line represents the elastic potential energy of the wire.

.....

.....

.....

..... [2]

(b) Wires G and H are joined together end-to-end to form a composite wire of negligible weight. The composite wire hangs vertically from a fixed support.

© UCLES 2023

A block of weight of 2.0 N is attached to the end of the wire, as shown in Fig. 4.2.

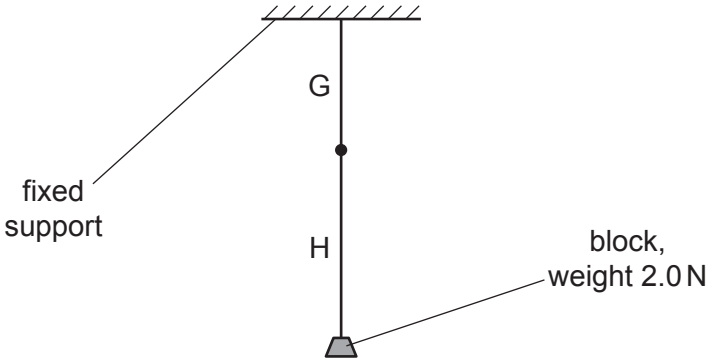

Fig. 4.2

(i) Use Fig. 4.1 to determine:

- the extension x_G of wire G

x_G = ... mm

- the extension x_H of wire H.

x_H = ... mm
[1]

(ii) Calculate the total elastic potential energy E_P of the composite wire due to the weight of the block.

E_P = ... J [2]

(iii) The original length of wire G is L and the original length of wire H is $1.5L$.

Calculate the ratio

$$\frac{\text{cross-sectional area of wire G}}{\text{cross-sectional area of wire H}}.$$

ratio = ... [3]

[Total: 9]

BLANK PAGE

5 Two point sources, A and B, produce coherent electromagnetic waves. The waves from A and B are emitted in phase and have wavelength λ, as shown in Fig. 5.1.

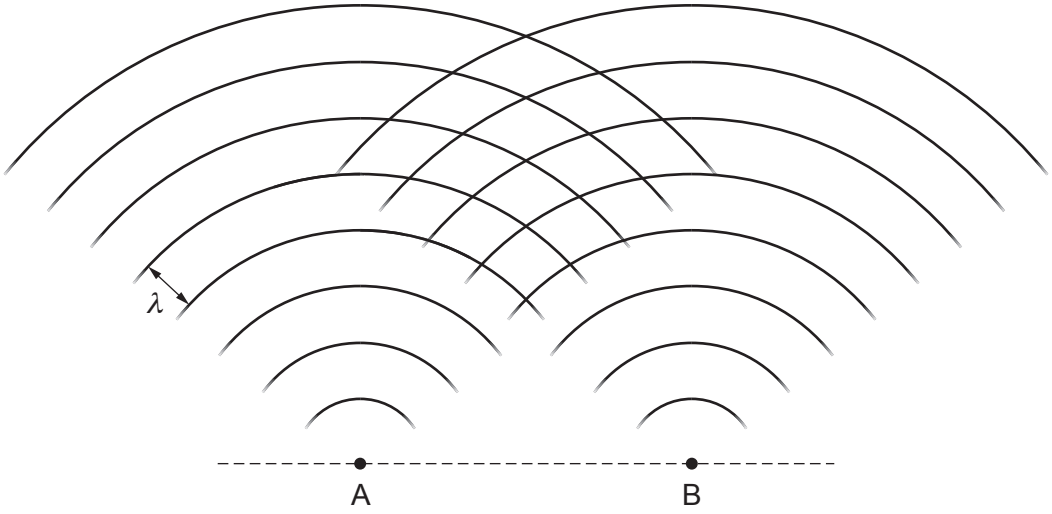

Fig. 5.1 (not to scale)

The lines on Fig. 5.1 represent wavefronts. All the points on a wavefront are in phase.

(a) On Fig. 5.1, mark with a cross (×):

(i) the position of an interference maximum (label this cross Y) [1]

(ii) the position of an interference minimum (label this cross Z). [1]

(b) The waves in air have a wavelength of 2.9×10^{-5} m.

An interference pattern is detected along a line parallel to AB and at a perpendicular distance of 140 m from AB. The spacing between adjacent interference maxima is 1.2 cm.

(i) Calculate the separation *a* of the sources A and B.

a = ... m [3]

(ii) State the principal region of the electromagnetic spectrum to which the waves belong.

..... [1]

[Total: 6]

6 A train travels at constant speed along a straight horizontal track towards an observer standing adjacent to the track, as shown in Fig. 6.1.

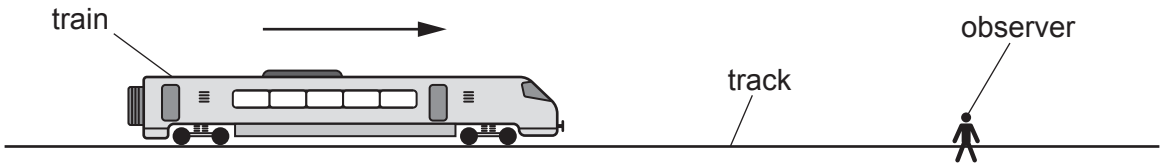

Fig. 6.1

The train sounds its horn continuously as it approaches the observer. The horn emits a sound of constant frequency 251 Hz. The frequency of sound heard by the observer is 291 Hz. The speed of sound in air is 340 m s^{-1}.

(a) Calculate the speed of the train.

speed = ... m s^{-1} [2]

(b) The train approaches and then passes the observer. The intensity I of the sound heard by the observer varies with the distance d of the horn from the observer.

When the horn is at a distance x_0 from the observer, the intensity I of the sound heard is I_0 and the amplitude A of the sound wave at the observer is A_0.

Fig. 6.2 shows the variation with d/x_0 of I/I_0 as the train moves away from the observer.

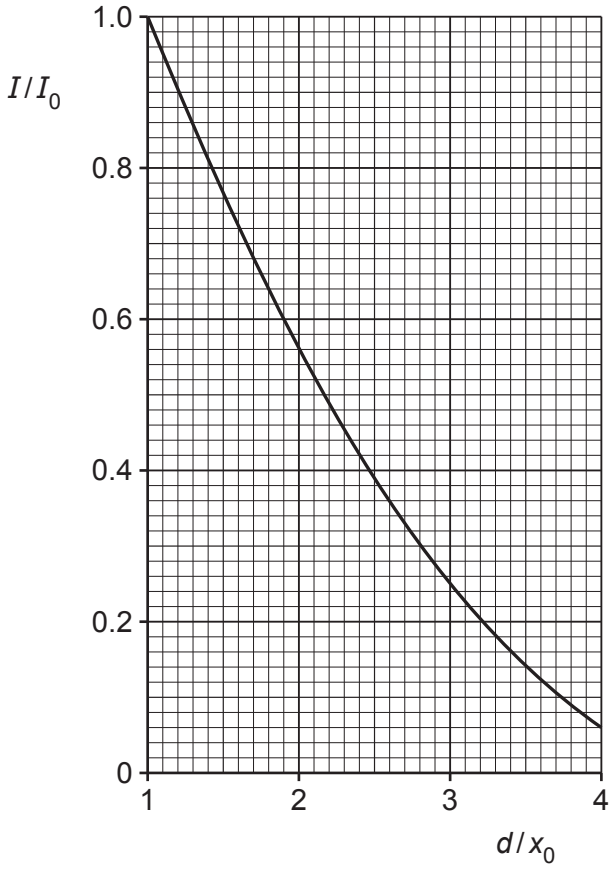

Fig. 6.2

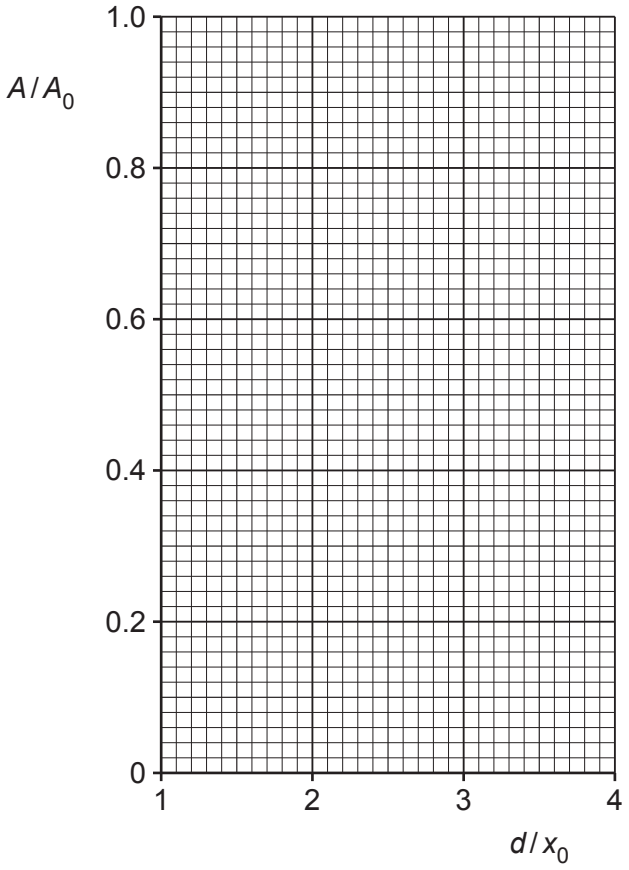

Fig. 6.3

(i) State the relationship between amplitude A and intensity I for a progressive wave.

..... [1]

(ii) On Fig. 6.3, sketch the variation with d/x_0 of A/A_0. [2]

[Total: 5]

7 **(a)** State Ohm's law.

.....

.....

..... [2]

(b) A battery of electromotive force (e.m.f.) 6.2 V and negligible internal resistance is connected in a circuit to a uniform resistance wire, a voltmeter, a fixed resistor and a switch, as shown in Fig. 7.1.

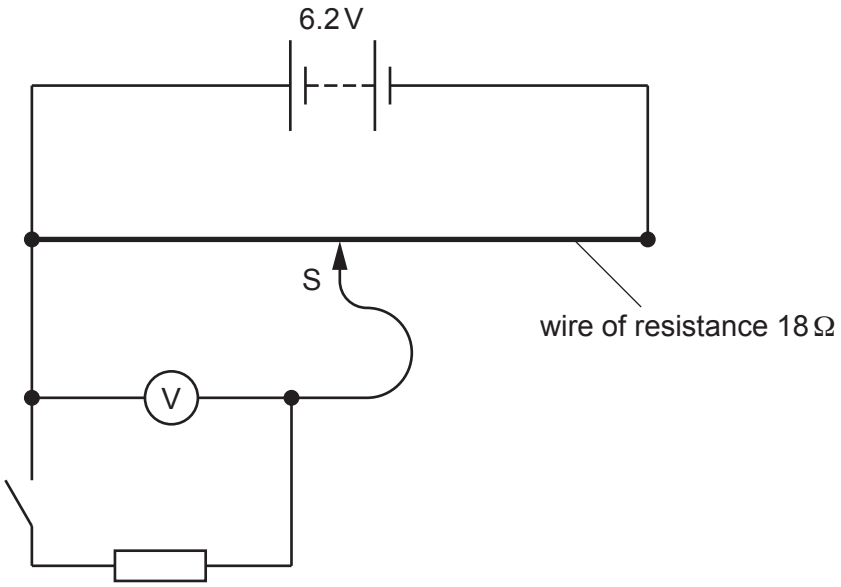

Fig. 7.1

The resistance wire has resistance 18 Ω, length 0.94 m and cross-sectional area 7.2×10^{-8} m^2. The slider S is positioned half-way along the length of the wire.

(i) Calculate the resistivity ρ of the material of the resistance wire.

ρ = ... Ω m [2]

(ii) The switch is open.
State the reading on the voltmeter.

voltmeter reading = ... V [1]

© UCLES 2023

(iii) The switch is now closed.

State whether there is an increase, decrease or no change to:

- the current in the battery

  .....

- the voltmeter reading.

  .....

[2]

(iv) The switch remains closed. The slider S is moved along the resistance wire so that the voltmeter reading is 3.1 V.

On Fig. 7.1, draw a cross (×) on the resistance wire to show a possible new position of the slider. [1]

(c) The circuit in **(b)** is altered by changing the battery for one of a different e.m.f.
The switch is open.

A student records the following data for the resistance wire:

current in the wire	0.93 A
mean drift speed of charge carriers	$1.3 \times 10^{-3}\,\text{m s}^{-1}$
number density of charge carriers	$9.0 \times 10^{28}\,\text{m}^{-3}$.

(i) Determine the charge q of a charge carrier in the wire suggested by this data.

q = ... C [2]

(ii) With reference to the value of q, explain why the data recorded by the student cannot be correct.

.....

..... [1]

[Total: 11]

BLANK PAGE

© UCLES 2023

8 **(a)** The nuclide $^{23}_{12}Mg$ is an isotope of magnesium that undergoes β^+ decay to form a new nuclide X according to the equation

$$^{23}_{12}Mg \rightarrow {}^{\cdots\cdots}_{\cdots\cdots}X + {}^{\cdots\cdots}_{\cdots\cdots}\beta^+ + {}^{0}_{0}\nu.$$

Four numbers are missing from the equation.

(i) For the nuclide $^{23}_{12}Mg$, state what is represented by the numbers 23 and 12.

23 represents: .....

12 represents: .....
[2]

(ii) Complete the equation by inserting the missing numbers. [2]

(iii) State the name of the group (class) of fundamental particles to which the positron and neutrino belong.

..... [1]

(b) A radioactive source emits particles from its nuclei when it decays.
Fig. 8.1 shows, for the source, the variation with kinetic energy of the number of particles emitted.

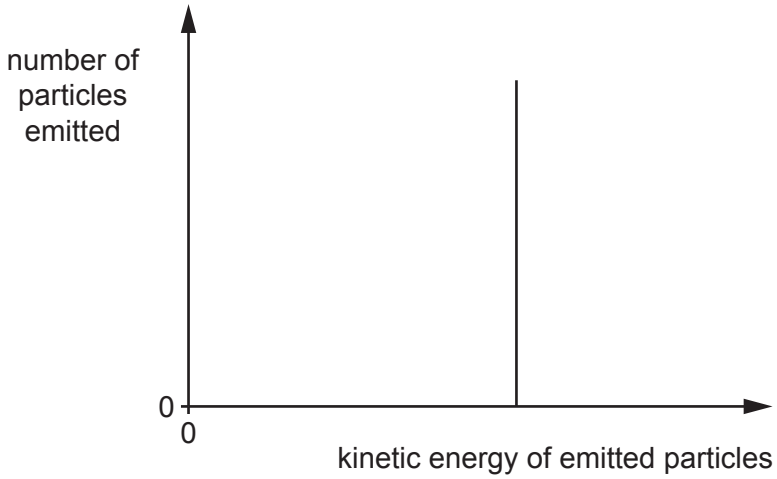

Fig. 8.1

State how Fig. 8.1 shows that these nuclei do **not** undergo beta-decay.

.....

..... [1]

[Total: 6]

© UCLES 2023

BLANK PAGE

Permission to reproduce items where third-party owned material protected by copyright is included has been sought and cleared where possible. Every reasonable effort has been made by the publisher (UCLES) to trace copyright holders, but if any items requiring clearance have unwittingly been included, the publisher will be pleased to make amends at the earliest possible opportunity.

To avoid the issue of disclosure of answer-related information to candidates, all copyright acknowledgements are reproduced online in the Cambridge Assessment International Education Copyright Acknowledgements Booklet. This is produced for each series of examinations and is freely available to download at www.cambridgeinternational.org after the live examination series.

Cambridge Assessment International Education is part of Cambridge Assessment. Cambridge Assessment is the brand name of the University of Cambridge Local Examinations Syndicate (UCLES), which is a department of the University of Cambridge.

© UCLES 2023